2.9 Technical data

2.9.1 Dimensions and weights

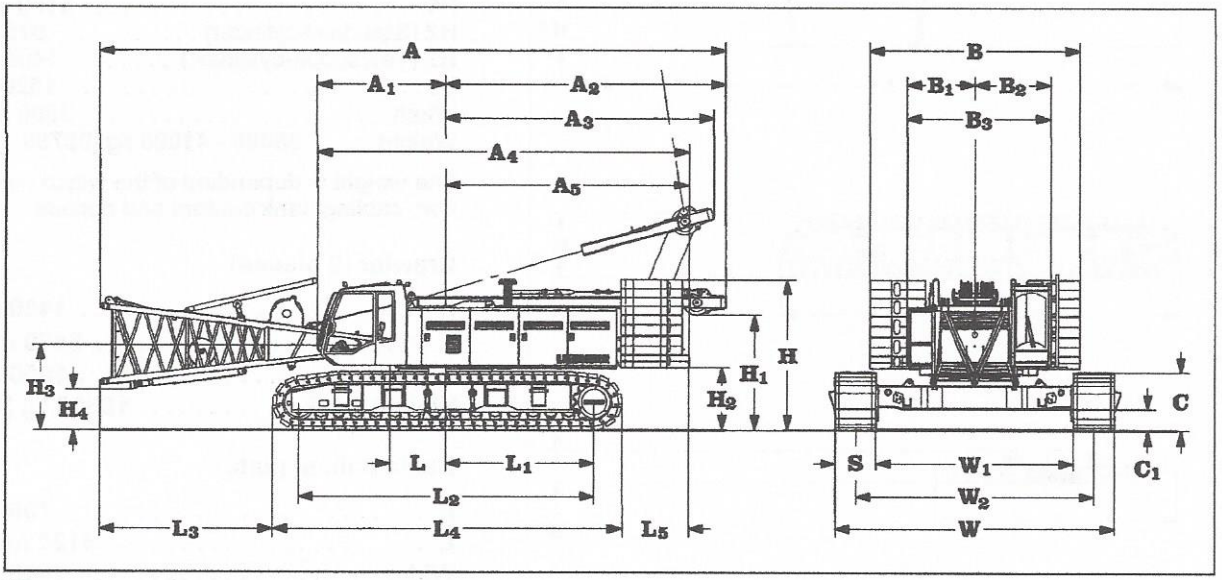

Dimensions of the LR 1160 — Fig. 2-28

Position	Description	Dimensions in mm [ft]
A	Total length of the uppercarriage with foot resting on ground and A-frame 1	15200 [50']
A1	Axis of rotation to the front edge of the operator's cab	3100 [10' 2"]
A2	Axis of rotation to A-frame resting on ground	6770 [22' 3"]
A3	Rear reach, A-frame in operating position	6450 [21' 2"]
A4	Length of uppercarriage	8975 [29' 5"]
A5	Rear tail radius	5880 [19' 4"]
H	Height above basic machine	3680 [12' 1"]
H1	Height above A-frame resting on ground	2730 [9']
H2	Ground clearance of uppercarriage	1500 [4' 11"]
H3	Height of centre of rotation from foot	2050 [6' 9"]
H4	Height of lower edge of foot in horizontal position	960 [3' 2"]
L	Axis of rotation to foot centre of rotation	1330 [4' 4"]
L1	Axis of rotation to middle travel drive	3625 [11' 11"]
L2	Wheel base (centre idler to centre travel drive)	7180 [23' 7"]
L3	Reach of foot resting on ground to crawler	4200 [13' 9"]
L4	Length of crawler	8470 [27' 9"]
L5	Reach of ballast weight to crawler	1600 [5' 3"]
B	Width of ballast weight	5100 [16' 9"]
B1	Axis of rotation to the outside edge of the uppercarriage	1650 [5' 5"]
B2	Centre of rotation to the outside edge of the operator's cab	1850 [6' 1"]
B3	Width of uppercarriage	3500 [11' 6"]
C	Height of crawler	1400 [4' 7"]
C1	Ground clearance of the undercarriage	500 [1' 8"]
S	Width of base plates	1000 [3' 3"]
W	Maximum width of undercarriage	6800 [22' 4"]
W1	Track width of undercarriage (narrow travel path)	5050 [16' 6"]
W2	Track width of undercarriage (wide travel path)	5800 [19']

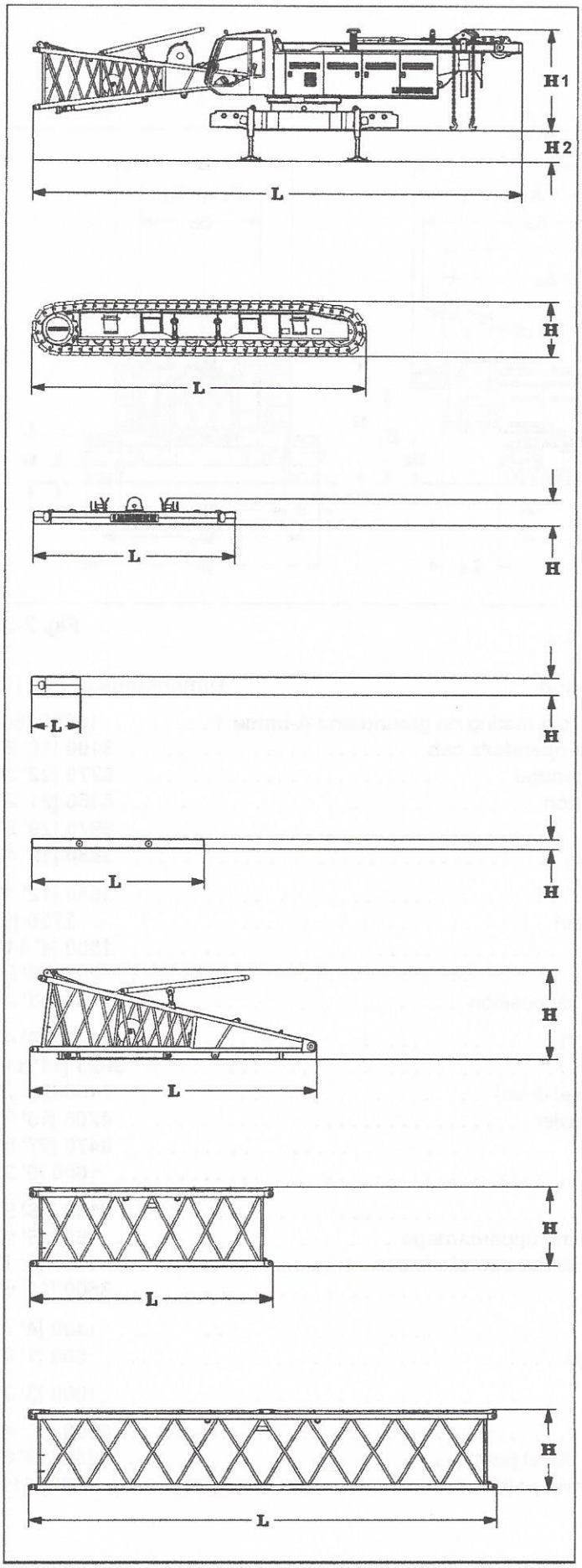

Dimensions of the machine parts, part 1 Fig. 2-29

Basic machine

- with A-frame 1 for main boom, main boom foot, Winches 1 + 2 in 12 t configuration,
- without ballast weight and crawler.

H1 ..... 3100 mm [10' 2"]
H2 (Standard-cylinder) ..... 975 mm [3' 2"]
H2 (Telescope-cylinder*) ..... 1409 mm [4' 6"]
L ..... 15200 mm [50']
Width ..... 3500 mm [11' 6"]
Weight .... 38000 - 41000 kg [83780 - 90390 lbs]

The weight is dependent of the winch configuration, cabling, tank content and options.

Crawler (2 pieces)

H ..... 1400 mm [4' 7"]
L ..... 8470 mm [27' 9"]
Width ..... 1050 mm [3' 5"]
Weight, each ..... 18800 kg [41450 lbs]

Basic ballast plate

H ..... 700 mm [2' 3"]
L ..... 5120 mm [16' 10"]
Width ..... 1630 mm [5' 4"]
Weight ..... 14300 kg [31530 lbs]

Ballast plate (8 pieces)

H ..... 500 mm [1' 8"]
L ..... 1480 mm [4' 10"]
Width ..... 1360 mm [4' 5"]
Weight, each ..... 5100 kg [11240 lbs]

Central ballast plate (2 pieces)

H ..... 290 mm [11"]
L ..... 4700 mm [15' 5"]
Width ..... 860 mm [2' 10"]
Weight, each ..... 7500 kg [16540 lbs]

Main boom foot

H ..... 2310 mm [7' 7"]
L ..... 7300 mm [23' 11"]
Width ..... 2280 mm [7' 6"]
Weight ..... 3200 kg [7050 lbs]

6 m [20 ft] main boom-centrepiece

H ..... 2020 mm [6' 8"]
L ..... 6050 mm [19' 10"]
Width ..... 2280 mm [7' 6"]
Weight ..... 1100 kg [2425 lbs]
(with main boom retaining rods and fly-jib-release rods)

11.7 m [38 ft] main boom-centrepiece

H ..... 2020 mm [6' 8"]
L ..... 11850 mm [38' 10"]
Width ..... 2280 mm [7' 6"]
Weight ..... 1900 kg [4190 lbs]
(with main boom retaining rods and fly-jib-release rods)

134073(g)LWN-TD8/11/2004

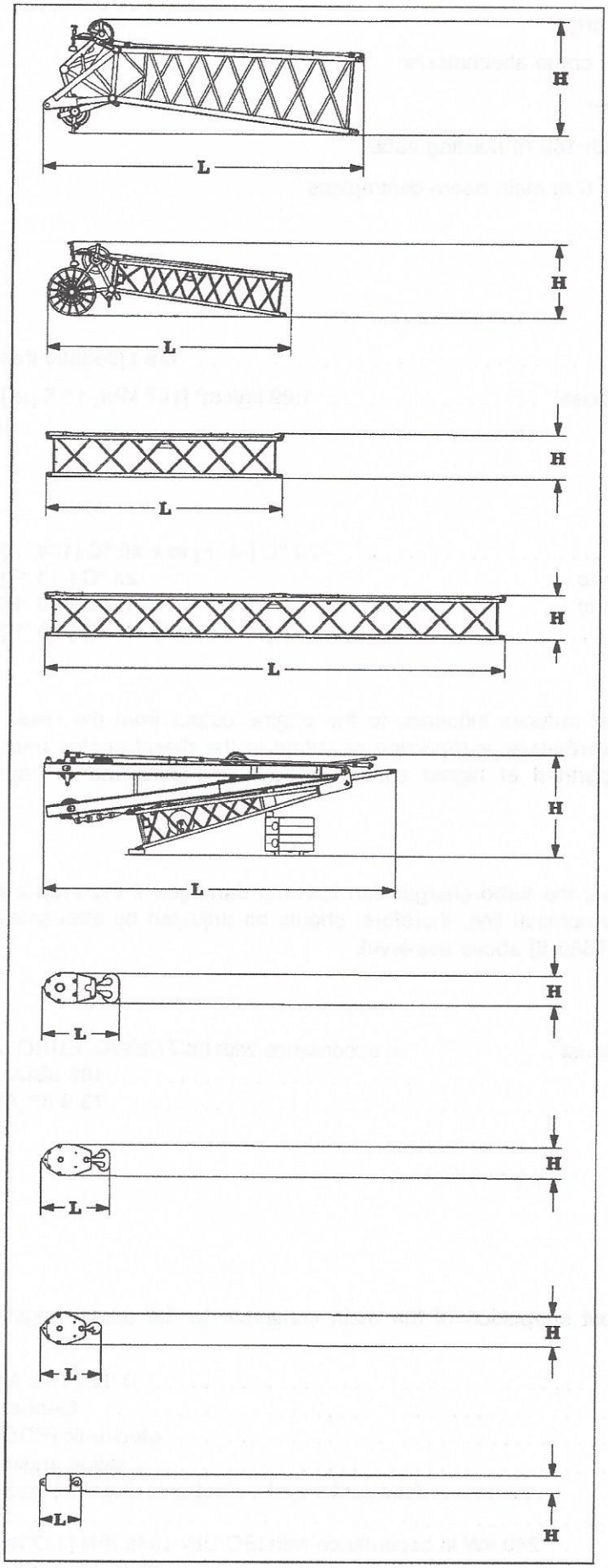

Dimensions of machine parts, part 2 Fig. 2-30

S-boom head

H ..... 2700 mm [8' 10"]
L ..... 7900 mm [25' 11"]
Width ..... 2280 mm [7' 6"]
Weight ..... 2700 kg [5950 lbs]

Fly-jib head

H ..... 1950 mm [6' 5"]
L ..... 6300 mm [20' 80"]
Width ..... 1500 mm [4' 11"]
Weight ..... 1135 kg [2500 lbs]

6 m [20 ft] fly-jib-centrepiece

H ..... 1150 mm [3' 9"]
L ..... 6100 mm [20']
Width ..... 1500 mm [4' 11]
Weight (with retaining rods) . 520 kg [1150 lbs]

11.7 m [38 ft] fly-jib-centrepiece

H ..... 1150 mm [3' 9"]
L ..... 11800 mm [38' 9"]
Width ..... 1500 mm [4' 11"]
Weight (with retaining rods) . 960 kg [2120 lbs]

Fly-jib foot with A-frames 2 + 3

H ..... 2570 mm [8' 5"]
L ..... 8870 mm [29' 1"]
Width ..... 1750 mm [5' 9"]
Weight ..... 4800 kg [10580 lbs]

Load hook 140 t [308650 lbs], 7 pulleys

H ..... 800 mm [2' 8"]
L ..... 2000 mm [6' 7"]
Width ..... 850 mm [2' 9"]
Weight ..... 2500 kg [5510 lbs]

Load hook, 80 t [176370 lbs], 3 pulleys

H ..... 800 mm [2' 8"]
L ..... 1750 mm [5' 9"]
Width ..... 560 mm [1' 10"]
Weight ..... 2000 kg [4410 lbs]

Load hook, 40 t [88190 lbs], 1 pulley

H ..... 800 mm [2' 80"]
L ..... 1550 mm [5' 1"]
Width ..... 500 mm [1' 8"]
Weight ..... 1500 kg [3310 lbs]

Load hook, 12 t [26460 lbs]

H ..... 400 mm [1' 4"]
L ..... 970 mm [3' 2"]
Width ..... 400 mm [1' 4"]
Weight ..... 600 kg [1320 lbs]

Operating weight and load bearing capacity

These details apply to the following crawler crane attachments:

- Basic machine with A-frame 1 and crawler.
- Winches 1 and 2 in 12 t-configuration with 150 m hoisting cable.
- Main boom, comprising: Main boom foot, 6 m main boom-centrepiece [20 ft] Length, S-boom head.
- Ballast weight:
  Rear counterweight 55 t [99210 lbs]
  Central ballast 15 t [33070 lbs]

Operating weight ..... 156 t [343900 lbs]

Load bearing capacity (crawler with web shoes) ..... 1.09 kg/cm² [107 kPa, 15.5 psi]

2.9.2 Operating conditions

Ambient temperatures

- for operation ..... - 20 °C [-4 °F] to + 40 °C [104 °F]
- with optional cold weather kit 1 * down to ,. -25 °C [-13 °F]
- with optional cold weather kit 2 * down to ,. -40 °C [-40 °F]
- for storage ..... down to -40 °C [-40 °F]

Operating height

The diesel engine's exhaust turbo charger reduces influence to the engine output from the diminished air pressure at higher altitudes. Nevertheless, a reduction of output in the diesel engine must be assumed, if the crawler crane is operated at higher altitudes above sea-level and in high atmospheric temperatures.

IMPORTANT !

When operating the crane at high altitudes, the turbo charger can become damaged if the engine's nominal line is not adapted. The engine's nominal line, therefore, should be adjusted by after-sales service if repeatedly operated at 2000 m [6560 ft] above sea-level.

2.9.3 Emissions

Emission limiting values of the engine exhaust ,. in accordance with 88/77/EWG, EURO 0
sound pressure ..... 106 dB(A).
Sound pressure in the operator's cab ..... 73.9 dB(A)

2.9.4 Engine assembly

Diesel engine with
- Exhaust turbo charging,
- with intercooler,
- electronic engine control,
- automatic power limit control to output adaptation of the main consumer to the actual engine speed.

Type ..... D 926 TI-E A4
Manufacturer ..... Liebherr
Control ..... electronic (EDC)
Design ..... in-line engine
Burning process ..... four-stroke cycle, electronic diesel injection
Number of cylinders 6
Output ..... 240 kW in accordance with ISO/DIN 3046 IFN [322 hp]
Nominal speed ..... 2000 U/min [rpm]
Idling speed ..... 800 U/min [rpm]

134073(g)LWN-TD8/11/2004

Consumption, fuel ..... 220 g/kWh
Consumption, lubricating oil ..... approx. 2 g/kWh

Electrical system

Starter ..... 24 V, 6.6 kW
Generator ..... 28 V, 80 A

Lubricant

Fuel ..... commercially approved vehicle diesel fuel
Tank capacity ..... approx. 800 l [211 gal].

Coolant ..... Water with admixtures of anti-corrosion and anti-freeze agents
Level of entire cooling system ..... approx. 90 l [24 gal].

All detailed information for valid fuels can be found in chapter 7 "Maintenance" under chapter 7 "Fuels and lubricants".

2.9.5 Hydraulic system

The hydraulic assembly
- is powered by the diesel engine,
- comprises an axial piston displacement-double pump, an axial piston pump and three gear-type pumps,
- is run with open hydraulic circuits,
- is fitted with an energy saving and pump preserving flow control on demand.

In the hydraulic system
- all occurring pressure peaks are limited by an automatic working pressure suppression,
- a return filter purifies the hydraulic oil.

The LUDV-block
- is the central distributor block in the hydraulic system,
- allows a flow distribution independent of the load,
- can be divided into two areas with the separating plate, e.g. for separate control of right and left crawler.

The hydraulic system must be specially adapted to the connection of hydraulically driven options (auxiliary winch, etc.).

Hydraulic oil ..... released hydraulic oil
(see chapter 7 under chapter 7 "Lubricant chart")
Level of hydraulic tank ..... approx. 650 l [172 gal]
Working pressure in the hydraulic system ..... max. 330 bar [4786 psi]

2.9.6 Winches

Winches 1 and 2

The design of winches 1 and 2 in the uppercarriage is determined under point 1.3 in the machine travel documents.

Configuration of winches 1 and 2		Crane	Free-fall *	Quick winch*
Line pull (nominal load) in 7th layer	kN	114	114	108
Rope diameter in	mm [in]	26 [1"]	26 [1"]	26 [1"]
Cable drum diameter (first position) in	mm [ft]	580 [1' 11"]	580 [1' 11"]	580 [1' 11"]
Rope speed in 7th layer with empty hook	m/min [ft/min]	0 - 135 [0 - 443]	0 - 135 [0 - 443]	0 - 192 [0 - 630]
Rope capacity (7 layers) in	m [ft]	473 [1552']	473 [1552']	473 [1552']

Technical data for winches 1 and 2 — Chart 2-07

Winches 1 and 2 are characterised by
- **compact, easy to maintain design,**
- **Load support via the hydraulic system, torque support or coupling,**
- **an interior mounted planetary gear,**
- **spring-loaded multi-disc holding brakes.**

The drive of winches 1 and 2
- **is resulted via high-pressure regulated axial piston displacement motors,**
- **makes full use of the whole engine output during partial-load operation via speed adaptation to the respective line pull.**

IMPORTANT !

Winches 1 and 2 are also indicated in the operating manual as main winches or, according to their application, as crane or hoisting winches.

The crane winch as well as the quick winch *
- **serves to apply the lifting gear during crane operation,**
- **has no free-fall operation brake,**
- **is equipped with multi-disc holding brake.**

The optional free-fall winch *
- **has been provided for speedy lowering of the empty hook,**
- **has a generously dimensioned free-fall operation brake, taking over the function of the clutch as well as the operation brakes,**
- **designed to be low-wear and maintenance-free.**

Main boom-adjustable winch

The main boom-adjustable winch is equipped with
- **an internal planetary gearbox,**
- **an axial piston motor,**
- **hydraulic hydraulically released multi-disc holding brake.**

Line pull ..... max. 150 kN
Rope diameter ..... 24 mm
Rope speed ..... 0 - 99 m/min [0 - 325 ft/min]

134073(g)LWN-TD8/11/2004

2.9.7 Swing

The swing comprises a single row ball-bearing with external teeth and two swing gears.

Each swing gear comprises
- an axial piston motor,
- a planetary gearbox,
- a hydraulically released multi-disc brake,
- a pinion gear drive.

In free swing the rotation moment is hydraulically controlled.

Swing speed of the uppercarriage (steplessly selectable from 3 speed ranges) . . . . . 0 - 3 U/min [rpm]

2.9.8 Crawler

Both of the crawler's crawler bases cab be controlled independently of each other. The preferred travel direction is forwards.

Travel speed (steplessly selectable) . . . . . 0 - 1.5 km/h [0 - 0.9 mph]
Total machine traction . . . . . 1000 kN [224800 lbs]
Gradability with reduced load capacity (see load chart book) . . . . . max. 1 %

When travelling inclinations without load the following points should be noted:

- Inclination to the side may not exceed 1 %.
- Dynamic effects must be avoided during travel from the horizontal into the inclination and back into the horizontal position (see fig. 1)!
- Travel of inclinations with assembled load hook only.
- The specified boom angle is in relation to the horizontal position.
- Boom upward slope:

Main boom	Boom angle 71°	
Main boom with reduction	Boom angle 71°	
Fixed jib	Main boom 75°	
Adjustable fly-jib	Main boom 75°,	Fly-jib 55°

- Boom downward slope:

Main boom	Boom angle 86°	
Main boom with reduction	Boom angle 86°	
Fixed jib	Main boom 88°	
Adjustable fly -jib	Main boom 88°,	Fly-jib 78°

2

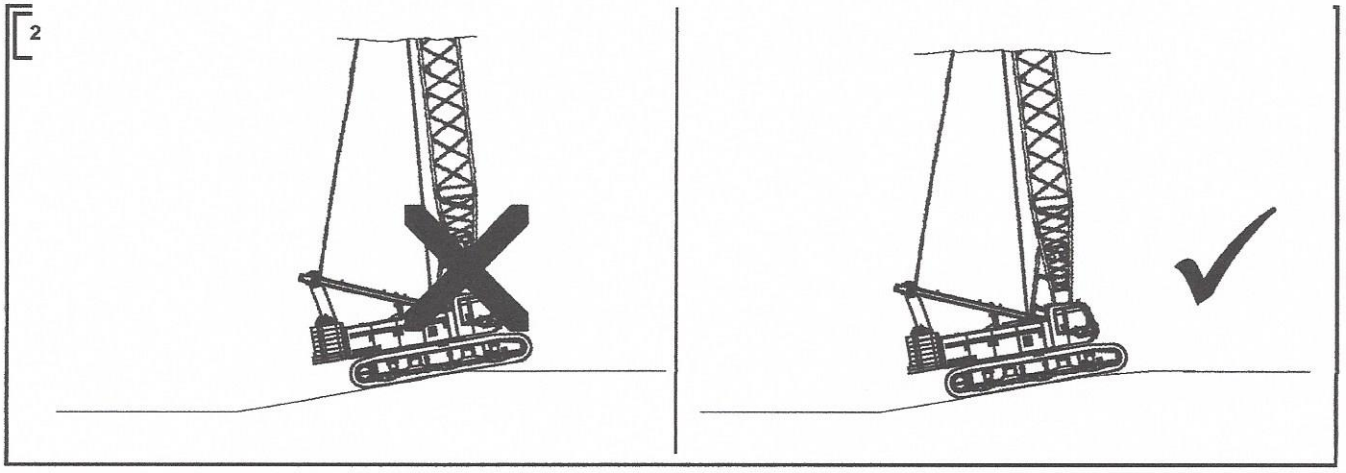

Working range – main boom (No. 2018.xx) 86° – 15°

55 t counterweight and 15 t carbody counterweight

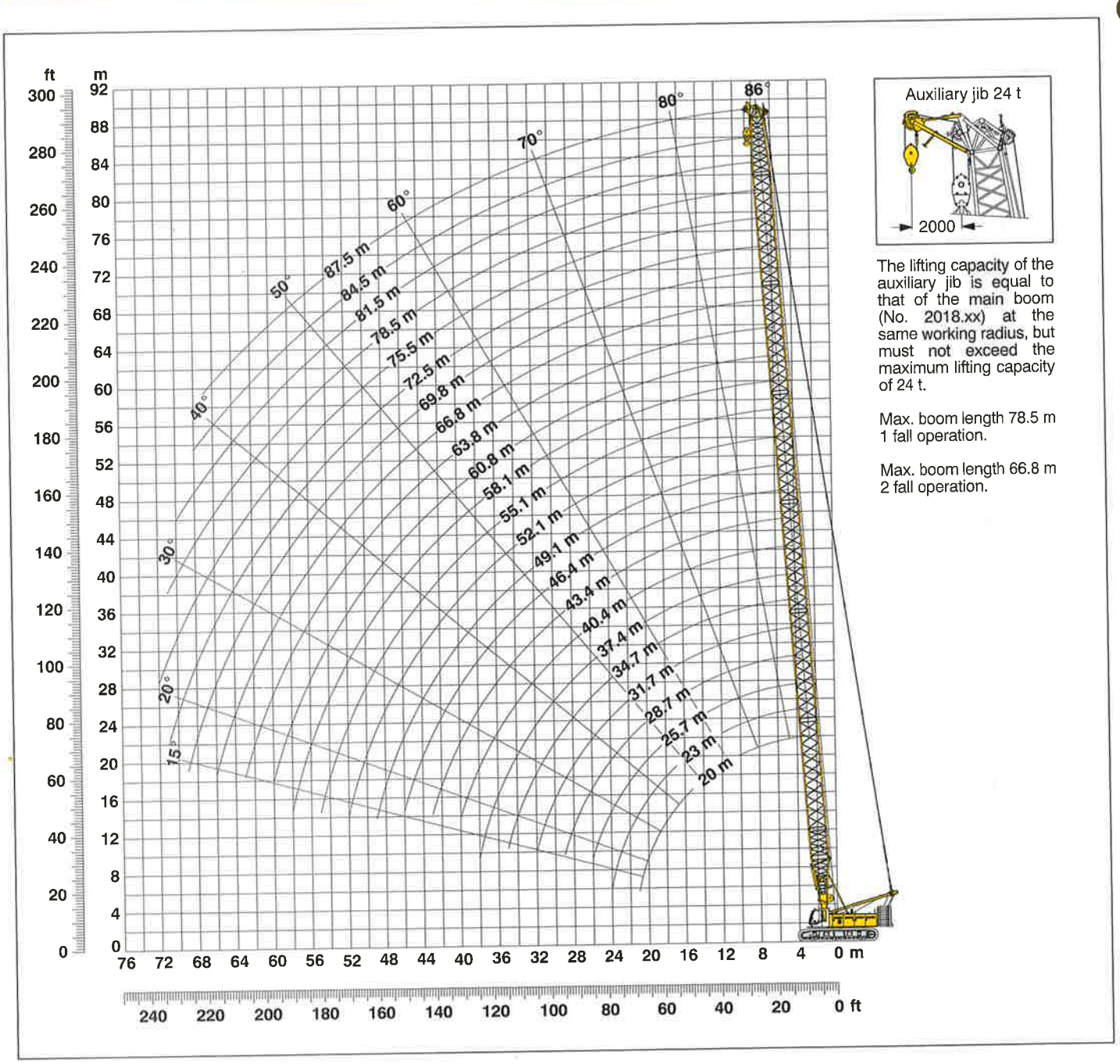

Auxiliary jib 24 t

The lifting capacity of the auxiliary jib is equal to that of the main boom (No. 2018.xx) at the same working radius, but must not exceed the maximum lifting capacity of 24 t.

Max. boom length 78.5 m 1 fall operation.

Max. boom length 66.8 m 2 fall operation.

Main boom configuration (Table1 – No. 2018.xx)

Configuration for boom lengths between 20 m and 87.5 m:

	Length	Amount of boom extensions																							
Boom foot	7.0 m	1	1	1	1	1	1	1	1	1	1	1	1	1	1	1	1	1	1	1	1	1	1	1	1
Boom insert	3.0 m		1		1		1		1		1		1		1		1		1		1		1		1
Boom insert	6.0 m	1	1			1	1			1	1			1	1			1	1			1	1	2	2
Boom insert	11.7 m			1	1	1	1	2	2	2	2	3	3	3	3	4	4	4	4	5	5	5	5	5	5
Boom head	7.0 m	1	1	1	1	1	1	1	1	1	1	1	1	1	1	1	1	1	1	1	1	1	1	1	1
Boom length (m)		20	23	25.7	28.7	31.7	34.7	37.4	40.4	43.4	46.4	49.1	52.1	55.1	58.1	60.8	63.8	66.8	69.8	72.5	75.5	78.5	81.5	84.5	87.5

Lift chart for main boom (No. 2018.xx)

Capacities in metric tons for boom lengths (20 m – 87.5 m) – with 120 kN winches
55.0 t counterweight and 15 t carbody counterweight

	Boom length in (m)												
Radius	**20**	**28.7**	**34.7**	**40.4**	**46.4**	**52.1**	**58.1**	**63.8**	**69.8**	**75.5**	**81.5**	**87.5**	**Radius**
(m)	t	t	t	t	t	t	t	t	t	t	t	t	(m)
3.7	160.0*												3.7
5	137.2	136.2	126.4										5
6	136.1	126.7	115.9	102.4	86.4	69.5							6
7	118.1	106.6	98.6	92.1	82.7	68.2	57.0	45.4					7
8	102.2	90.7	85.7	79.0	75.7	64.7	55.3	44.9	37.9	31.5	26.1		8
9	88.7	78.5	75.7	71.5	67.5	61.6	53.3	43.6	36.9	31.0	26.0	21.4	9
10	78.3	71.7	67.3	64.2	60.9	56.8	51.2	42.3	34.6	30.2	25.4	21.1	10
12	61.3	57.6	55.7	53.2	50.7	48.4	44.5	38.9	32.8	28.7	24.1	20.0	12
14	49.4	49.4	46.3	45.2	43.2	41.4	39.6	33.4	30.8	27.2	22.5	18.9	14
16	41.2	41.2	40.7	39.1	37.5	36.0	33.9	31.3	28.9	25.7	21.3	17.8	16
18	35.1	35.2	35.0	34.4	33.0	31.8	30.5	29.0	27.0	24.4	20.1	16.6	18
20	30.4	30.5	30.4	30.2	29.4	28.3	27.1	26.1	25.0	22.4	19.2	15.7	20
22		26.9	26.7	26.6	26.3	25.4	24.4	23.2	22.5	21.4	18.3	15.0	22
24		23.9	23.7	23.6	23.3	23.0	22.0	21.2	20.3	19.5	17.3	14.2	24
26		21.4	21.3	21.1	20.9	20.6	20.0	19.3	18.4	17.7	16.3	13.4	26
28		19.3	19.2	19.1	18.8	18.6	18.3	17.6	16.8	16.1	15.3	12.6	28
30			17.4	17.3	17.0	16.8	16.5	16.1	15.3	14.7	14.0	12.2	30
32			15.9	15.8	15.5	15.3	15.0	14.7	14.1	13.4	12.8	11.1	32
34			14.5	14.5	14.2	14.0	13.7	13.4	12.9	12.3	11.7	10.8	34
36				13.3	13.0	12.8	12.5	12.2	11.6	11.4	10.8	10.1	36
38				12.2	12.0	11.8	11.5	11.2	10.9	10.5	9.9	9.3	38
40				11.3	11.1	10.9	10.6	10.3	10.0	9.7	9.1	8.5	40
42					10.3	10.0	9.7	9.5	9.2	8.9	8.3	7.8	42
44					9.5	9.3	9.0	8.7	8.4	8.1	7.7	7.1	44
46					8.8	8.6	8.3	8.0	7.7	7.4	7.1	6.5	46
48						8.0	7.7	7.4	7.1	6.8	6.5	5.9	48
50						7.4	7.1	6.8	6.5	6.2	5.9	5.4	50
55							5.8	5.6	5.3	5.0	4.7	4.3	55
60								4.6	4.2	4.0	3.6	3.3	60
65									3.4	3.1	2.8	2.4	65
70										2.3	2.0		70

Above lift chart is for reference only. For actual lift duty please refer to lift chart in operator's cab or manual.
* Capacities over 140 t require a special heavy duty boom head.

Working range – luffing jib (No. 1309.xx) 78° - 15°

Main boom 88° - 45°

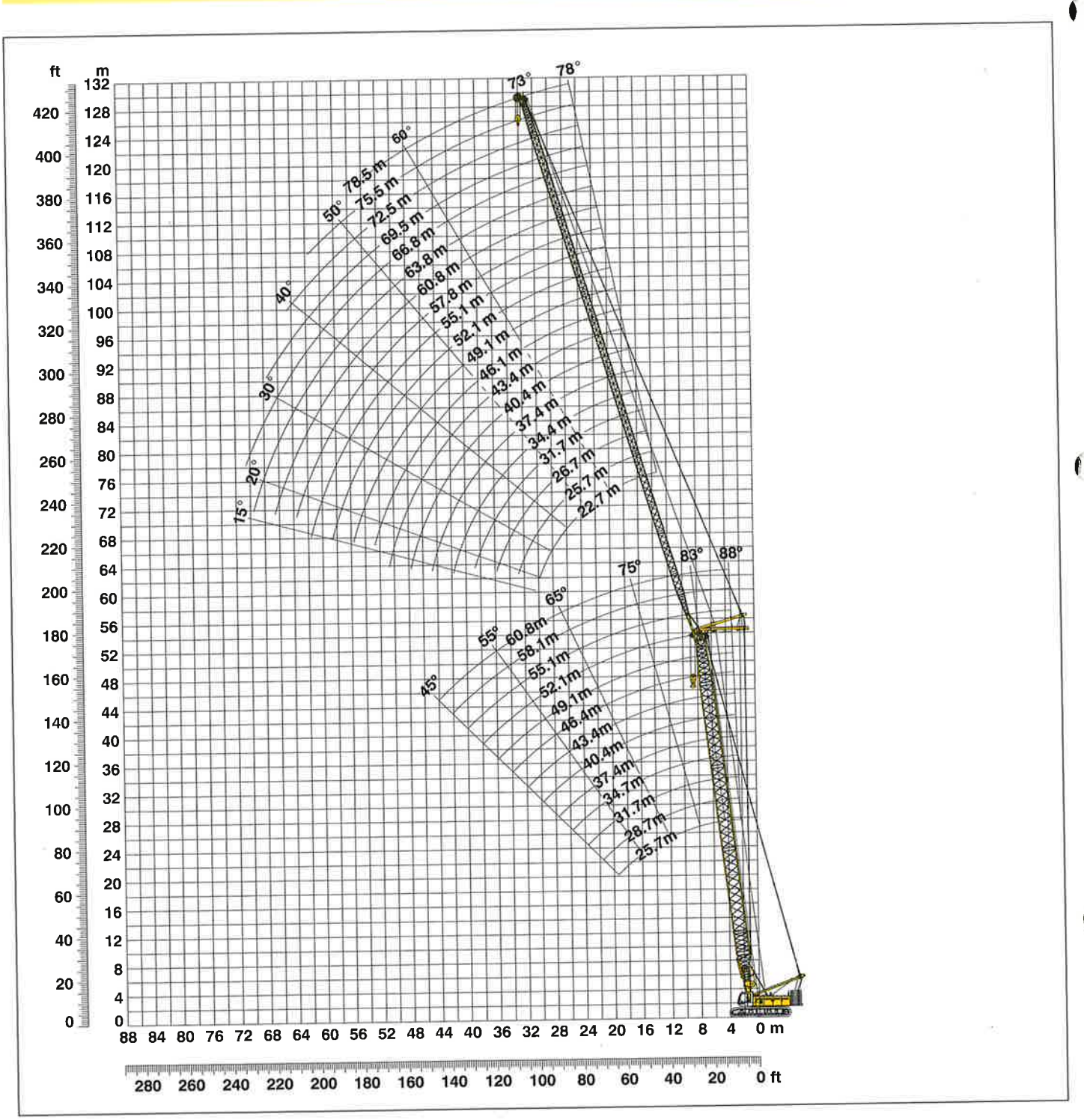

Boom configuration for main boom lengths (25.7 m – 61.1 m) – see table 1 on page 12

Jib configuration for jib lengths (22.7 m – 78.5 m)

	Length	Amount of luffing jib extensions																			
Luffing jib foot	5.5 m	1	1	1	1	1	1	1	1	1	1	1	1	1	1	1	1	1	1	1	1
Luffing jib insert	3.0 m		1		1		1		1		1		1		1		1		1		1
Luffing jib insert	6.0 m			1	1			1	1			1	1			1	1			1	1
Luffing jib insert	11.7 m	1	1	1	1	2	2	2	2	3	3	3	3	4	4	4	4	5	5	5	5
Luffing jib head	5.5 m	1	1	1	1	1	1	1	1	1	1	1	1	1	1	1	1	1	1	1	1
Luffing jib length (m)		22.7	25.7	28.7	31.7	34.4	37.4	40.4	43.4	46.1	49.1	52.1	55.1	57.8	60.8	63.8	66.8	69.5	72.5	75.5	78.5

Lift chart – tower crane (No. 1309.xx)

Main boom angle 88°

Main boom 25.7 m

	Jib length in (m)							
	22.7	28.7	34.4	40.4	49.1	55.1	69.5	78.5
Radius (m)	t	t	t	t	t	t	t	t
8.4	47.4							
10	46.7	35.0						
11	44.2	34.2	27.1					
13	37.9	32.5	26.1	20.4				
14	33.4	31.5	25.5	20.0	13.8			
16	28.9	27.2	24.2	19.1	13.3	10.3		
19	22.2	21.2	20.0	17.4	12.3	9.5	5.1	
20	20.6	19.5	18.8	16.7	12.1	9.3	5.0	3.3
22	17.1	16.4	16.6	15.3	11.1	8.9	4.9	3.2
24	15.4	15.0	14.3	13.9	10.7	8.5	4.7	3.1
30		11.3	10.8	10.2	9.3	7.7	4.4	2.7
36			8.9	8.4	7.6	6.8	4.1	2.5
42				7.0	6.4	5.9	3.8	2.2
50					5.0	4.7	3.2	2.0
55						4.1	2.9	
60							2.5	
65							2.1	

Main boom 37.4 m

	Jib length in (m)							
	22.7	28.7	34.4	40.4	49.1	55.1	69.5	78.5
Radius (m)	t	t	t	t	t	t	t	t
8.8	39.8							
11	37.2	29.9						
12	33.6	29.2	23.3					
13	31.3	28.1	22.8	18.3				
15	26.3	25.3	21.8	17.6	12.4			
16	24.5	22.2	21.4	17.2	12.2	9.4		
19	19.2	18.7	17.7	15.9	11.0	8.9	4.7	
22	15.9	14.7	14.5	13.4	10.3	8.3	4.6	3.1
24	14.4	13.5	12.8	11.8	9.8	7.9	4.5	2.9
30		10.6	10.0	9.0	8.3	7.2	4.2	2.6
36			8.3	7.6	6.6	6.2	3.9	2.4
42				6.4	5.7	5.2	3.6	2.2
46					5.1	4.7	3.4	2.1
48					4.9	4.4	3.3	2.0
50					4.6	4.2	3.1	
55						3.7	2.7	
60							2.2	

Main boom 43.4 m

	Jib length in (m)							
	22.7	28.7	34.4	40.4	49.1	55.1	69.5	78.5
Radius (m)	t	t	t	t	t	t	t	t
9	34.9							
11	32.9	27.4						
12	30.3	26.8	21.5					
13	28.1	25.6	21.1	16.9				
15	23.7	22.7	19.9	16.3	11.3			
16	22.3	21.2	19.2	16.0	11.2	8.9		
19	17.8	17.2	16.2	14.9	10.5	8.4	4.4	
22	14.9	13.9	13.5	12.5	9.8	7.9	4.4	3.0
26	11.5	11.3	10.5	10.3	8.8	7.3	4.2	2.8
30		10.1	9.4	8.4	7.8	6.9	4.0	2.6
36			7.9	7.2	6.1	5.8	3.8	2.3
42				6.1	5.3	4.8	3.4	2.1
46					4.8	4.3	3.2	2.0
50					4.3	3.9	2.9	
55						3.4	2.5	
60								

Main boom 52.1 m

	Jib length in (m)							
	22.7	28.7	34.4	40.4	49.1	55.1	69.5	78.5
Radius (m)	t	t	t	t	t	t	t	t
10	28.3							
11	27.1	23.0						
12	25.3	22.3	18.6					
13	23.5	21.3	18.3	14.7				
15	20.4	18.9	17.1	14.3	10.1			
17	18.0	16.7	15.5	13.6	9.9	8.0		
20	14.9	13.9	13.0	11.7	9.3	7.5	4.1	
22	13.4	12.2	11.7	10.6	8.9	7.2	4.0	2.8
24	12.2	11.2	10.6	9.5	8.4	6.9	4.0	2.7
26	10.9	10.5	9.5	8.9	7.8	6.6	3.9	2.6
32		8.3	7.8	7.0	6.3	5.7	3.7	2.4
36			6.9	6.3	5.4	5.0	3.5	2.2
42				5.3	4.7	4.2	3.1	2.0
48					4.1	3.6	2.6	
50					3.9	3.4	2.4	
55						3.0	2.0	

Main boom 55.1 m

	Jib length in (m)							
	22.7	28.7	34.4	40.4	49.1	55.1	63.8	69.5
Radius (m)	t	t	t	t	t	t	t	t
10	26.3							
11	25.2	21.4						
12	23.1	20.8	17.5					
14	20.7	18.9	16.9	13.9				
15	19.3	17.8	16.2	13.7	9.6			
17	17.1	15.8	14.6	12.9	9.4	7.6		
18	16.0	14.8	13.8	12.4	9.2	7.5	5.2	
20	14.2	13.2	12.3	11.4	8.9	7.2	5.2	3.9
22	12.9	11.3	11.2	10.2	8.5	6.9	5.1	3.9
24	11.3	10.7	10.2	9.0	7.9	6.6	5.0	3.8
26	10.5	10.0	9.1	8.4	7.3	6.3	4.8	3.7
32		7.8	7.5	6.7	5.9	5.3	4.4	3.5
36			6.6	6.1	5.1	4.7	4.0	3.4
42				5.1	4.5	3.9	3.4	3.0
50					3.7	3.2	2.6	2.2
55						2.9	2.2	

Main boom 60.8 m

	Jib length in (m)				
	22.7	25.7	28.7	31.7	34.4
Radius (m)	t	t	t	t	t
10	22.2				
11	21.3	19.9	18.3		
12	20.3	19.2	17.9	16.7	
13	19.2	18.3	17.3	16.2	15.3
14	18.2	17.4	16.5	15.6	14.7
16	16.1	15.5	14.8	14.2	13.5
18	14.4	13.8	13.2	12.8	12.3
20	12.8	12.4	11.5	11.3	10.8
22	11.1	11.1	10.5	10.4	9.9
24	10.2	10.2	9.5	9.4	9.0
26	8.8	9.1	8.9	8.5	8.2
28		8.4	8.1	8.0	7.5
32			7.2	7.0	6.7
34				6.7	6.4
36					6.1
38					5.7

Capacities in metric tons with luffing jib (No. 1309.xx) 55 t counterweight + 15 t carbody counterweight. Above lift chart is for reference only.
For actual lift duty and complete chart with all available configurations please refer to lift chart in operator's cab or manual.

Lift chart – luffing jib (No. 1309.xx)

Main boom angle 83°

Main boom 25.7 m

	Jib length in (m)							
	22.7	28.7	34.4	40.4	49.1	55.1	69.5	78.5
Radius (m)	t	t	t	t	t	t	t	t
12.6	44.2							
15	39.8	32.1						
16	37.8	31.3	24.7					
18	32.4	29.6	24.0	18.7				
22	21.6	21.5	21.2	17.0	11.4			
24	18.7	19.3	19.4	16.1	10.9	8.8		
26	17.1	17.6	17.4	15.1	10.6	8.5		
28		15.8	15.7	14.2	10.4	8.2	4.6	
30		14.3	14.5	13.2	10.1	8.0	4.5	2.8
32		13.1	13.3	12.4	9.8	7.7	4.4	2.7
38			10.3	9.6	8.9	7.0	4.1	2.5
44				7.7	7.9	6.4	3.8	2.2
48					7.1	6.0	3.6	2.1
50					6.7	5.8	3.4	2.1
55						5.1	3.2	
65							2.7	
70							2.4	

Main boom 37.4 m

	Jib length in (m)							
	22.7	28.7	34.4	40.4	49.1	55.1	69.5	78.5
Radius (m)	t	t	t	t	t	t	t	t
14	36.8							
16	33.6	27.7						
18	30.3	26.4	21.3					
20	26.0	24.4	20.6	16.4				
22	21.8	21.6	19.6	15.8	10.6			
24	19.2	18.6	18.6	15.1	10.4	8.2		
28	15.3	15.0	14.7	13.6	9.8	7.8	4.4	
30		13.7	13.3	12.7	9.6	7.6	4.3	
32		12.7	12.5	11.6	9.3	7.4	4.2	2.7
34		11.4	11.1	11.2	9.0	7.2	4.2	2.6
40			9.3	9.0	8.1	6.6	3.9	2.3
46				7.3	6.9	5.9	3.6	2.1
50					6.2	5.5	3.4	2.0
55						4.9	3.2	
60						4.2	2.9	
65							2.6	
70							2.3	

Main boom 43.4 m

	Jib length in (m)							
	22.7	28.7	34.4	40.4	49.1	55.1	69.5	78.5
Radius (m)	t	t	t	t	t	t	t	t
15	31.0							
17	28.2	24.8						
19	25.5	22.9	19.4					
20	22.6	22.0	19.1	15.2				
24	18.0	17.7	16.7	14.3	9.9			
26	16.0	15.2	15.3	13.7	9.6	7.7		
28	14.7	14.2	13.9	13.0	9.3	7.5		
30		13.1	12.5	12.1	9.1	7.3	4.1	
32		12.1	11.3	10.9	8.9	7.1	4.1	2.6
34		11.2	10.8	10.3	8.6	6.9	4.0	2.5
40			8.9	8.5	7.6	6.4	3.8	2.3
46				7.0	6.5	5.7	3.5	2.1
50					5.8	5.3	3.3	2.0
55					4.9	4.7	3.1	
60						4.0	2.8	
70							2.2	

Main boom 52.1 m

	Jib length in (m)							
	22.7	28.7	34.4	40.4	49.1	55.1	69.5	78.5
Radius (m)	t	t	t	t	t	t	t	t
16	23.1							
18	21.6	19.2						
20	19.6	17.8	15.9					
22	17.7	16.3	14.8	12.8				
24	15.9	15.0	13.8	12.2	8.9			
26	14.5	13.7	12.8	11.3	8.7	7.0		
30	12.4	11.4	10.9	10.2	8.2	6.7	3.8	
34		10.2	9.7	8.9	7.7	6.4	3.7	2.4
36		9.3	9.1	8.4	7.3	6.2	3.7	2.4
40			8.0	7.5	6.6	5.8	3.5	2.2
42			7.4	7.0	6.3	5.6	3.5	2.2
46				6.3	5.7	5.2	3.3	2.0
48				5.8	5.4	4.9	3.2	
55					4.4	4.1	2.8	
60						3.6	2.5	
65							2.2	

Main boom 55.1 m

	Jib length in (m)							
	22.7	28.7	34.4	40.4	49.1	55.1	63.8	69.5
Radius (m)	t	t	t	t	t	t	t	t
17	20.9							
18	20.0	17.5						
20	18.2	16.5	14.6					
22	16.7	15.2	13.7	11.7				
24	15.1	14.0	12.8	11.2	8.5			
26	13.8	13.0	11.8	10.6	8.3	6.7		
30	11.0	11.2	10.4	9.5	7.8	6.4	4.8	3.7
32		10.5	9.7	9.0	7.5	6.3	4.7	3.7
36		9.1	8.7	8.0	6.9	6.0	4.5	3.6
42			7.2	6.7	5.9	5.3	4.2	3.4
48				5.6	5.1	4.6	3.9	3.1
50					4.8	4.4	3.8	3.0
55					4.2	3.8	3.3	2.7
60						3.4	2.8	2.4
65							2.4	2.0
70							2.1	

Main boom 60.8 m

	Jib length in (m)				
	22.7	25.7	28.7	31.7	34.4
Radius (m)	t	t	t	t	t
17	17.6				
18	17.0	15.9			
19	16.3	15.4	14.4		
20	15.6	14.8	14.0	13.2	
22	14.3	13.6	12.9	12.3	11.4
24	13.2	12.7	11.6	11.2	10.7
26	12.3	11.5	11.1	10.5	10.0
28	11.2	11.0	10.4	10.0	9.5
30	10.4	10.3	9.9	9.4	9.0
32	9.0	9.6	9.4	9.0	8.5
34		8.8	8.8	8.5	8.1
36			8.3	8.0	7.7
38				7.6	7.3
40				7.1	6.9
42					6.5

Capacities in metric tons with luffing jib (No. 1309.xx) 55 t counterweight + 15 t carbody counterweight. Above lift chart is for reference only. For actual lift duty and complete chart with all available configurations please refer to lift chart in operator's cab or manual.

Lift chart – luffing jib (No. 1309.xx)

Main boom angle 75°

Main boom 25.7 m

	Jib length in (m)							
	22.7	28.7	34.4	40.4	49.1	55.1	69.5	78.5
Radius (m)	t	t	t	t	t	t	t	t
19.1	31.2							
22	27.2	26.2						
26	22.5	22.2	21.1					
28	20.6	20.4	19.9	16.0				
32		17.3	17.1	14.3	10.4			
34		16.1	15.8	13.4	10.1	7.8		
36		14.8	14.3	12.7	9.9	7.6		
40			12.4	11.2	9.4	7.2	4.1	
42			11.5	10.7	9.1	7.0	4.0	
44				10.2	8.8	6.7	4.0	2.3
46				9.6	8.5	6.5	3.9	2.3
48				8.9	8.2	6.4	3.8	2.2
50					7.8	6.2	3.7	2.1
55					6.9	5.8	3.4	
60						5.1	3.2	
70							2.8	
75							2.6	

Main boom 37.4 m

	Jib length in (m)							
	22.7	28.7	34.4	40.4	49.1	55.1	69.5	78.5
Radius (m)	t	t	t	t	t	t	t	t
22.2	24.1							
26	20.6	19.8						
28	19.2	18.4	17.8					
30	17.9	17.2	16.6	14.9				
34	15.4	15.2	14.6	13.9	9.6			
36		14.2	13.8	13.2	9.5	7.3		
40		12.0	12.3	11.0	9.1	7.0		
42			11.5	10.4	8.9	6.9	3.9	
44			10.9	9.8	8.7	6.7	3.9	
46				9.2	8.5	6.5	3.8	2.2
48				8.7	8.3	6.3	3.7	2.2
50				8.2	8.1	6.2	3.6	2.1
55					7.4	5.8	3.4	
60						5.4	3.2	
65						4.8	3.0	
70							2.8	
75							2.7	

Main boom 43.4 m

	Jib length in (m)							
	22.7	28.7	34.4	40.4	49.1	55.1	69.5	78.5
Radius (m)	t	t	t	t	t	t	t	t
24	20.9							
28	18.0	17.3						
30	16.8	16.2	15.6					
32	15.8	15.1	14.6	13.7				
34	14.9	14.3	13.7	13.2				
36	12.1	13.5	12.9	12.4	9.0			
38		12.7	12.2	11.5	8.9	6.9		
40		12.0	11.6	11.1	8.7	6.8		
44			10.5	10.0	8.4	6.5	3.7	
46			9.9	9.5	8.3	6.4	3.7	
48				8.9	8.1	6.2	3.6	2.1
50				8.5	7.9	6.1	3.6	2.1
60					6.4	5.4	3.1	
65						4.9	3.0	
75							2.6	
80							2.5	

Main boom 52.1 m

	Jib length in (m)							
	22.7	28.7	34.4	40.4	49.1	55.1	69.5	78.5
Radius (m)	t	t	t	t	t	t	t	t
26	16.8							
30	15.1	13.9						
32	14.3	13.2	12.1					
34	13.4	12.5	11.4	9.9				
38	11.9	11.3	10.4	9.3	7.5			
40		10.8	9.9	8.9	7.3	6.0		
44		9.9	9.2	8.2	6.9	5.8		
46			8.8	7.9	6.7	5.7	3.4	
48			8.5	7.6	6.5	5.6	3.4	
50				7.3	6.3	5.4	3.3	2.0
55				6.7	5.8	5.1	3.2	
60					5.4	4.7	3.0	
65						4.4	2.8	
70							2.6	
75							2.5	
80							2.3	

Main boom 55.1 m

	Jib length in (m)							
	22.7	28.7	34.4	40.4	49.1	55.1	63.8	69.5
Radius (m)	t	t	t	t	t	t	t	t
28	14.6							
30	13.9	12.6						
32	13.1	11.6	10.6					
36	11.6	10.7	9.9	8.7				
38	11.2	10.3	9.4	8.4	6.7			
42		9.6	8.6	7.7	6.4	5.5		
44		9.2	8.3	7.4	6.2	5.4		
46			8.0	7.1	6.0	5.2	4.0	
48			7.8	6.8	5.8	5.1	3.9	3.2
50			7.5	6.5	5.6	4.9	3.9	3.1
55				6.1	5.2	4.6	3.7	3.0
60					4.8	4.3	3.4	2.9
65						4.0	3.2	2.7
70						3.8	3.0	2.5
75							2.8	2.2
80								2.1

Main boom 60.8 m

	Jib length in (m)				
	22.7	25.7	28.7	31.7	34.4
Radius (m)	t	t	t	t	t
30	10.9	10.3			
32	10.4	9.9	9.4	8.8	
34	10.0	9.5	9.0	8.6	8.1
36	9.6	9.1	8.6	8.2	7.8
38	9.2	8.7	8.2	7.8	7.5
40	8.8	8.3	7.9	7.5	7.1
42		8.1	7.5	7.2	6.8
44			7.3	6.9	6.6
46			7.1	6.7	6.3
48				6.5	6.1
50					5.9

Capacities in metric tons with luffing jib (No. 1309.xx) 55 t counterweight + 15 t carbody counterweight. Above lift chart is for reference only. For actual lift duty and complete chart with all available configurations please refer to lift chart in operator's cab or manual.

Lift chart – luffing jib (No. 1309.xx)

Main boom angle 65°

Main boom 25.7 m

	Jib length in (m)						
	22.7	28.7	34.4	40.4	49.1	55.1	69.5
Radius (m)	t	t	t	t	t	t	t
26.8	20.4						
32	16.4	16.2					
34	15.2	15.0	14.8				
38		13.1	12.9	12.6			
40		12.2	12.1	11.8			
42			10.4	11.1	9.1		
46			9.1	9.9	8.8	6.8	
48				9.3	8.7	6.7	
50				8.8	8.4	6.5	
55					7.4	6.1	3.5
60					6.5	5.6	3.3
65						5.1	3.1
70							2.9
75							2.8
80							2.7

Main boom 37.4 m

	Jib length in (m)						
	22.7	28.7	34.4	40.4	49.1	55.1	69.5
Radius (m)	t	t	t	t	t	t	t
31.7	15.1						
36	12.9	12.7					
38	12.1	11.9					
40	11.3	11.1	10.9				
42		10.4	10.2	9.7			
46		9.2	9.1	8.8			
48			8.6	8.3	7.7		
50			8.1	7.9	7.4		
55				6.9	6.5	6.1	
60					5.7	5.4	3.3
65					5.0	4.8	3.1
70						4.2	3.0
75							2.8
80							2.7
85							2.3

Main boom 43.4 m

	Jib length in (m)						
	22.7	28.7	34.4	40.4	49.1	55.1	69.5
Radius (m)	t	t	t	t	t	t	t
34.3	12.7						
38	11.4	10.8					
40	10.7	10.3					
42	10.0	9.7	9.3				
46		8.7	8.4	7.9			
48		8.2	8.0	7.5			
50			7.5	7.2	6.5		
55				6.3	5.7	5.3	
65					4.6	4.2	3.1
70						3.7	2.8
75							2.4
80							2.1

Main boom 52.1 m

	Jib length in (m)						
	22.7	28.7	34.4	40.4	49.1	55.1	69.5
Radius (m)	t	t	t	t	t	t	t
38	9.7						
40	9.2						
42	8.7	8.2					
44	8.3	7.8					
46	7.9	7.4	7.0				
48		7.0	6.6				
50		6.7	6.3	5.9			
55			5.6	5.2	4.6		
60				4.6	4.0	3.6	
65					3.5	3.1	2.3
70					3.1	2.7	
75						2.4	

Main boom 55.1 m

	Jib length in (m)						
	22.7	28.7	34.4	40.4	49.1	55.1	63.8
Radius (m)	t	t	t	t	t	t	t
40	8.6						
44	7.8	7.3					
46	7.4	6.9	6.5				
48	7.0	6.6	6.2				
50		6.3	5.9	5.4			
55			5.2	4.8	4.2		
60				4.2	3.6	3.2	
65				3.7	3.2	2.8	2.3
70					2.8	2.4	
75						2.1	

Main boom 60.8 m

	Jib length in (m)				
	22.7	25.7	28.7	31.7	34.4
Radius (m)	t	t	t	t	t
42	7.1				
44	6.8	6.5			
46	6.4	6.2	6.0		
48	6.1	5.9	5.7	5.4	
50	5.8	5.6	5.4	5.1	5.0
55			4.7	4.5	4.4
60					3.9

Capacities in metric tons with luffing jib (No. 1309.xx) 55.0 t counterweight + 15 t carbody counterweight. Above lift chart is for reference only. For actual lift duty and complete chart with all available configurations please refer to lift chart in operator's cab or manual.

Lift chart – luffing jib (No. 1309.xx)

Main boom angle 45°

Main boom 25.7 m

	Jib length in (m)							
	22.7	28.7	34.4	40.4	49.1	55.1	69.5	78.5
Radius (m)	t	t	t	t	t	t	t	t
39.5	11.1							
42	10.3							
46		9.0						
48		8.5						
50			7.8					
55				6.6				
60				5.8				
65					4.8			
70						4.0		
80							2.5	
85							2.1	

Main boom 37.4 m

	Jib length in (m)					
	22.7	28.7	34.4	40.4	49.1	55.1
Radius (m)	t	t	t	t	t	t
47.8	7.1					
48	7.1					
50	6.7					
55		5.6				
60			4.7			
65				3.9		
70					3.0	
75					2.6	2.3

Main boom 43.4 m

	Jib length in (m)			
	22.7	28.7	34.4	40.4
Radius (m)	t	t	t	t
52.1	5.4			
55	5.0			
60		4.1		
65			3.4	
70				2.7

Main boom 52.1 m

	Jib length in (m)	
	22.7	28.7
Radius (m)	t	t
60	3.2	
65		2.4

Capacities in metric tons with luffing jib (No. 1309.xx) 55 t counterweight + 15 t carbody counterweight. Above lift chart is for reference only. For actual lift duty and complete chart with all available configurations please refer to lift chart in operator's cab or manual.